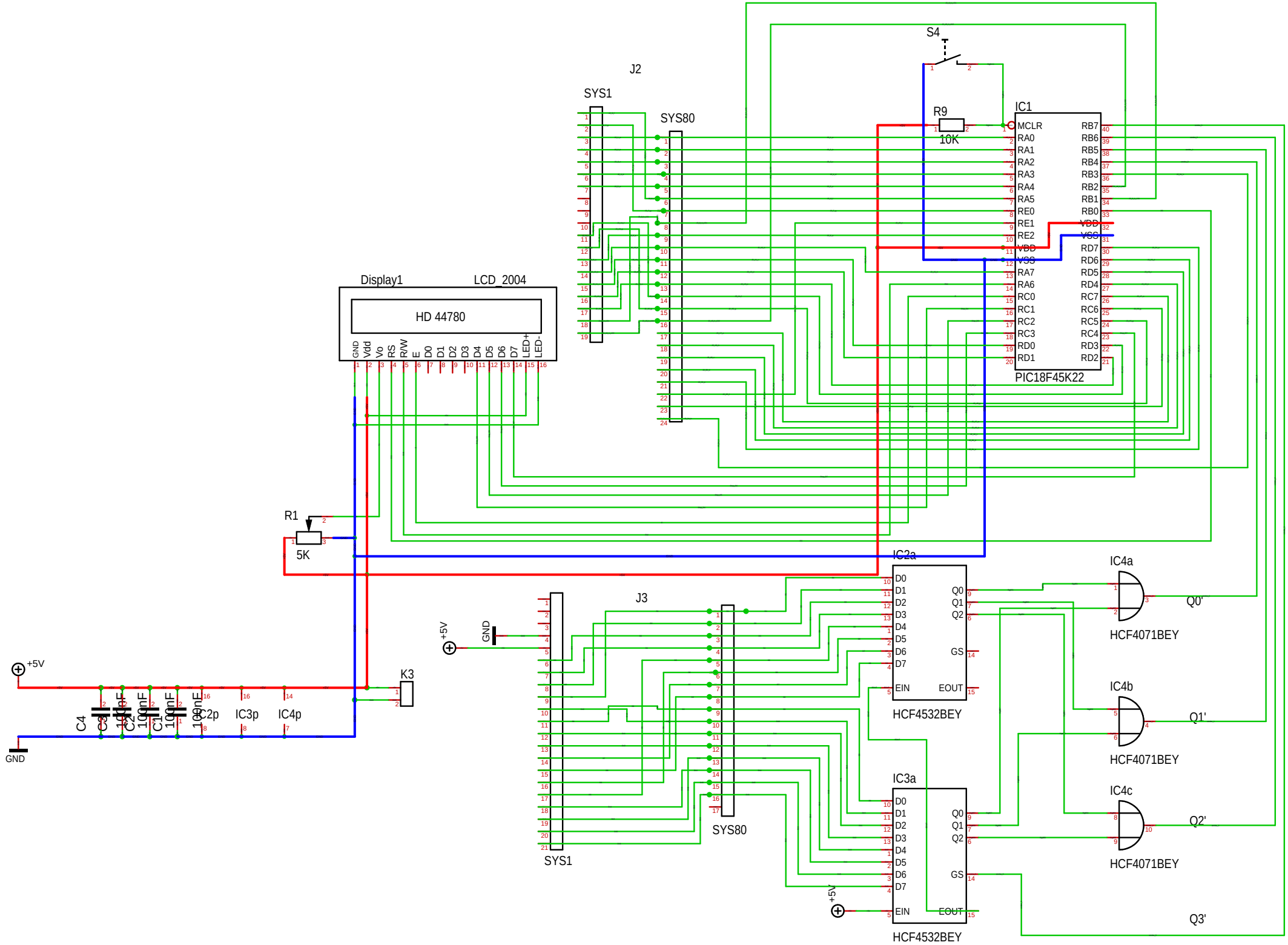
S4
J2
SYS1
SYS80
R9
10K
IC1
MCLR
RA0
RA1
RA2
RA3
RA4
RA5
RE0
RE1
RE2
VDD
VSS
RA7
RA6
RC0
RC1
RC2
RC3
RD0
RD1
RB7
RB6
RB5
RB4
RB3
RB2
RB1
RB0
VDD
VSS
RD7
RD6
RD5
RD4
RC7
RC6
RC5
RC4
RD3
RD2
PIC18F45K22
Display1
LCD_2004
HD 44780
GND
Vdd
Vo
RS
R/W
E
D0
D1
D2
D3
D4
D5
D6
D7
LED+
LED-
R1
5K
+5V
GND
K3
C4
C3
C2
C1
100nF
IC2p
IC3p
IC4p
J3
SYS1
SYS80
IC2a
D0
D1
D2
D3
D4
D5
D6
D7
Q0
Q1
Q2
GS
EIN
EOUT
HCF4532BEY
IC3a
HCF4532BEY
IC4a
IC4b
IC4c
HCF4071BEY
Q0'
Q1'
Q2'
Q3'